DTC	C1241/41	Low Battery Positive Voltage

DESCRIPTION

If there is a problem with the brake actuator assembly (skid control ECU) power supply circuit, the skid control ECU outputs the DTC and prohibits operation under the fail safe function.
If the voltage supplied to the IG1 terminal is not within the DTC detection threshold due to malfunctions in such as the battery and alternator circuit, this DTC is stored.

DTC No.	DTC Detecting Condition	Trouble Area
C1241/41	Any of the following conditions is detected: – IG1 terminal voltage is 9.5 V or less for 10 seconds or more at a vehicle speed 1.8 mph (3 km/h) for 3 seconds. – Excessive voltage applied to the brake actuator for 1.2 seconds or more.	• Battery • Charging system • Power source circuit

WIRING DIAGRAM

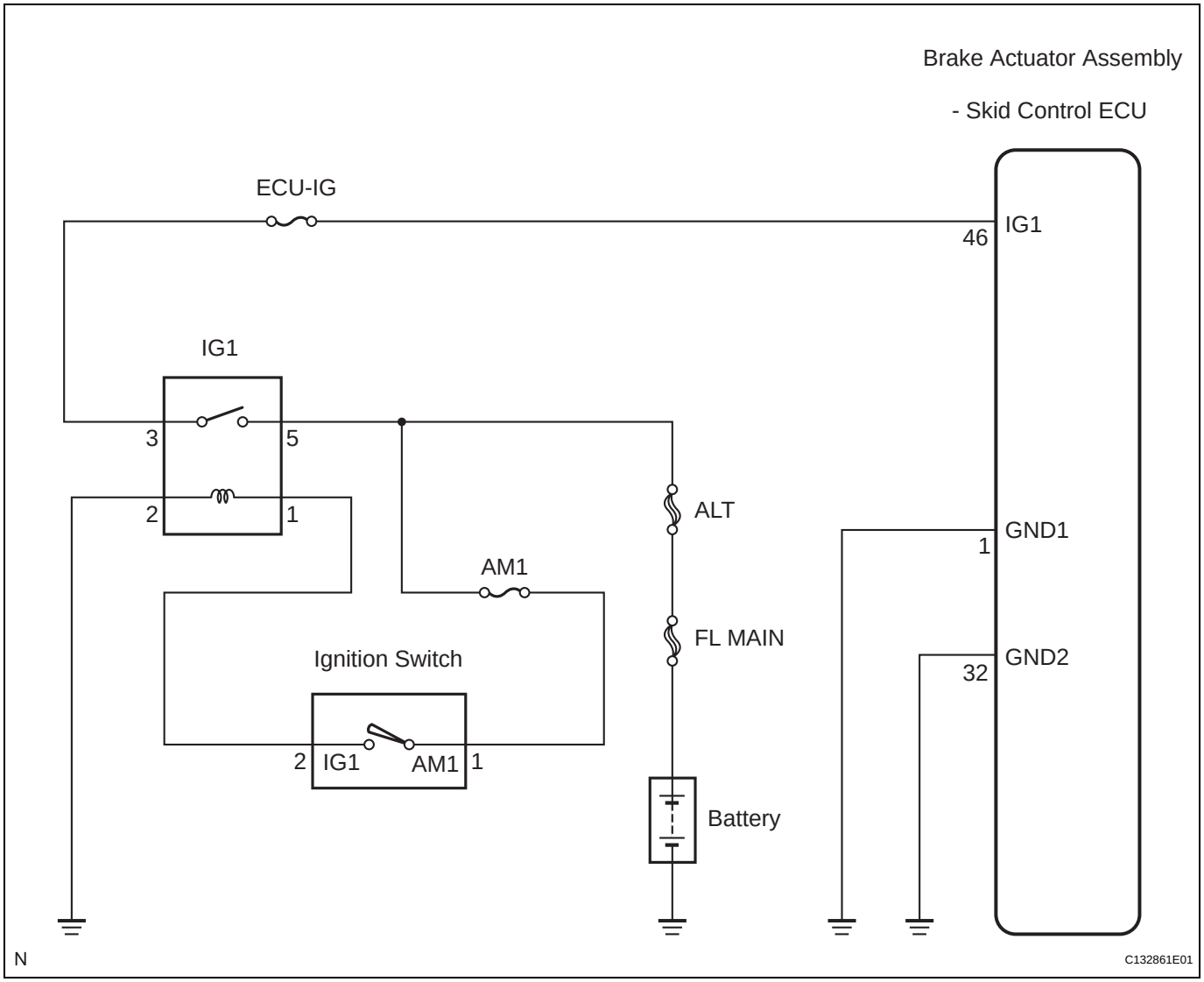

cardiagn.com

INSPECTION PROCEDURE

1 INSPECT BATTERY

(a) Check battery voltage.
Standard voltage:
11 to 14 V

NG → **INSPECT CHARGING SYSTEM**

OK

2 INSPECT ECU-IG FUSE

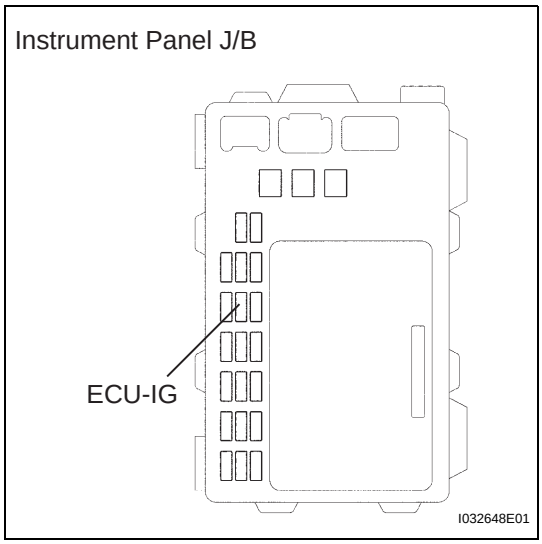

(a) Remove the ECU-IG fuse from the instrument panel J/B.
(b) Measure the resistance according to the value(s) in the table below.
Standard resistance

Tester Connection	Specified Condition
ECU-IG fuse	Below 1 Ω

NG → **REPLACE ECU-IG FUSE**

OK

3 INSPECT SKID CONTROL ECU (IG1 TERMINAL)

(a) WHEN USING INTELLIGENT TESTER
(1) Connect the intelligent tester to the DLC3.
(2) Start the engine.
(3) Select the DATA LIST mode on the intelligent tester.
(4) Check the voltage condition output from the ECU displayed on the intelligent tester.

Item	Measurement Item / Range (Display)	Normal Condition
IG VOLTAGE	ECU power supply voltage / TOO HIGH / NORMAL / TOO LOW	TOO HIGH: 14 V or over NORMAL: 9.8 to 14 V TOO LOW: Below 9.8 V

OK:
"NORMAL" is displayed.

cardiagn.com

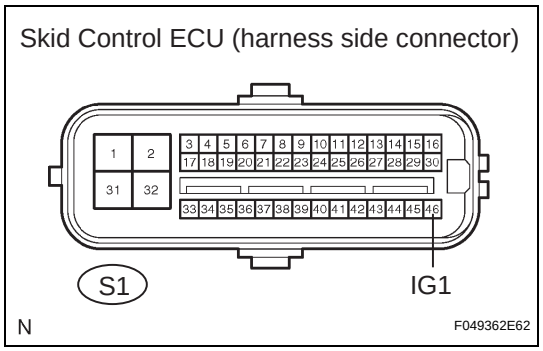

(b) WHEN NOT USING INTELLIGENT TESTER
(1) Disconnect the skid control ECU connector.
(2) Turn the ignition switch to the ON position.
(3) Measure the voltage according to the value(s) in the table below.

Standard voltage

Tester Connection	Condition	Specified Condition
S1-46 (IG1) - Body ground	IG switch ON	10 to 14 V

NG → **REPAIR OR REPLACE HARNESS OR CONNECTOR (IG1 CIRCUIT)**

OK

4 INSPECT SKID CONTROL ECU (GND TERMINAL)

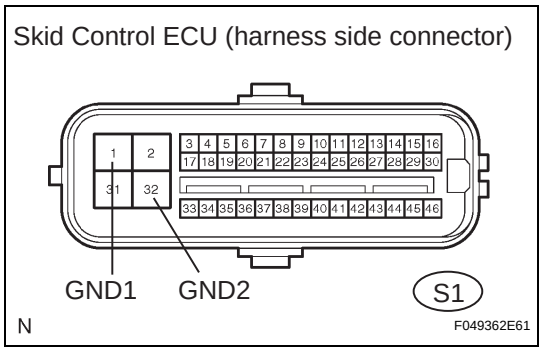

(a) Disconnect the skid control ECU connector.
(b) Measure the resistance according to the value(s) in the table below.

Standard resistance

Tester Connection	Specified Condition
S1-1 (GND1) - Body ground	Below 1 Ω
S1-32 (GND2) - Body ground	Below 1 Ω

NG → **REPAIR OR REPLACE HARNESS OR CONNECTOR (GND CIRCUIT)**

OK

REPLACE BRAKE ACTUATOR ASSEMBLY

cardiagn.com